Printed in Italy - 06/2022

https://www.ilsa-mc.com

Podatki, teže, dimenzije in opisi v tej publikaciji so povsem informativne narave. ILSA si pridržuje pravico do sprememb in variacij produkta brez dodatnih obvestil.

Information, weight, dimensions and descriptions in this publication are purely indicative. Messrs ILSA reserved the right to make changes or variations to the product shown without prior notice.

zastopa

Stroji Za Čiščenje Kovin

METAL CLEANING

ILSA-MC srl
Via C.Bassi, 1 | 40015 San Vincenzo di Galliera (BO)
Tel. +39 051 815154 | info@ilsa-mc.com | www.ilsa-mc.com

UNI EN ISO 9001:2015
CERTIFICATE
N° 50 100 16533

Prilagodljivost proizvodnje in nagnjenost k inovacijam

Oddelek za čiščenje kovin ILSA je bil ustanovljen pred več kot dvajsetimi leti (1992) zaradi zahtev trga za to posebno vrsto čiščenja in temelji na tehnologiji in izkušnjah, pridobljenih na osnovnem področju delovanja; ILSA od leta ustanovitve (1978) načrtuje in izdeluje čistilne stroje za delo s topili.
Sistemi so namenjeni različnim sektorjem: mikromehanski deli, struženi deli, liti deli, hidravlične komponente, deli za avtomobilsko industrijo, ventili in spojni elementi, izmenjevalniki toplote, orodja, sintrane komponente, zobniki, ure, medicinske komponente.
V dolgi zgodovini se je ILSA vedno osredotočila na produktivnost, ki jo odlikuje težnja po inovacijah.
ILSA razvija in proizvaja svoje sisteme v celoti v Italiji v tovarni blizu Bologne, enega najnaprednejših industrijskih grozdov na področju inženirstva na svetu, kjer skrbi za načrtovanje, konstrukcijo, montažo, ožičenje, programiranje in testiranje.
ILSA ponuja trgu:
najboljšo tehnologijo, ki je na voljo, zahvaljujoč popolni standardni opremi in široki izbiri možnosti in prilagoditev, ki omogočajo, da se na fleksibilen način združijo različne faze čiščenja
najbolj produktiven rezultat s tehnološkimi rešitvami, ki omogočajo drastično zmanjšanje časa cikla, ter povečajo produktivnost
najboljša okoljska kakovost, saj tehnologija »popoln vakuum« na koncu postopka zagotavlja, da na kosih ni nobenih ostankov, ki bi se lahko sprostili v okolje.
optimalno upravljanje z energijo z rešitvami, ki do 40% zmanjšajo vrednost porabe električne energije naprave.
natančnejše upravljanje s čistilnimi sredstvi in ostanki.

Z napravami in integracijo programske opreme, ki omogočajo drastično zmanjšanje porabe topil, popolno ločevanje olja od topila in nato ponovno uporabo v čistilnih ciklih z ogromnimi ekonomskimi koristmi in močnim zmanjšanjem vpliva na okolje.
Vse s samodejnimi postopki, ki poenostavljajo in zmanjšujejo dnevno vzdrževanje.
majhne dimenzije glede na proizvodno zmogljivost, kar je rezultat nenehne optimizacije delovnega prostora in industrializacije konstrukcije.
širok spekter razpoložljivih sistemov s kapacitetami polnenja od 5 do 1000 dm^3, dopolnjen z možnostjo posebnih specifikacij.
popolna integracija v okolju Industrija 4.0 zahvaljujoč naprednemu sistemu za nadzor strojne in programske opreme in komunikacijo.

Production flexibility and propensity to innovation

The metal cleaning division of ILSA was founded over twentyfive years ago (1992) in the wake of the demands of the market for this specific type of cleaning and based on the technology and experience gained in the area of origin; ILSA in fact, since 1978, the year of foundation, designs and manufactures cleaning machines for working with solvents.
The systems are aimed at different sectors: micromechanical parts , turning precision parts, moulded parts, hydraulic components, Automotive, valves and fittings, heat exchangers, tools, sintered components, sprockets, watches, medical.
In this long history, ILSA has always focused its efforts on the production flexibility, distinguished by the high propensity for innovation.
ILSA develops and manufactures its systems entirely in Italy in the factories of Bologna, one of the most advanced industrial clusters for engineering in the world, being directly responsible for the design, construction carpentry, assembly, wiring, programming and testing .
ILSA offers to the market:
***the best available technology** thanks to a complete standard equipment and a wide choice of options and customizations that allow to combine in a flexible way different cleaning phases*
***the most productive result** with technological solutions that allow a drastic reduction of the cycle time, with an average increase in productivity which, in some cases, with the same application, can even reach 100%.*

***the best environmental quality** since the technology "total vacuum" at the end of the process ensures that no residuals are present on the pieces or released into the environment.*
***the optimal energy management** with solutions that reduce till 40% the values of the actual electrical consumption of the plant.*
***the more accurate management** of cleaning products and residues.*
With devices and software integrations that allow you to drastically reduce the consumption of solvent, to completely separate the oils from the solvent, and then for reuse in the production cycles with enormous economic benefits and fundamental reduction of environmental impact.
All with automatic procedures that simplify and minimize the daily maintenance.
***the small dimensions** in relation to production capacity, the result of continuous work space optimization and industrialization of the construction.*
***a wide range**, probably one of the most comprehensive available with systems load capacities from 5 to 1000 dm^3 completed by the possibility of special achievements and specifications.*
***complete integration in Industry 4.0** ambient thanks to a sophisticated hardware and software monitoring and communication system.*

Najnovejše rešitve so dodane poleg značilnosti vseh sistemov ILSA, ki so:
- Delovanje v popolnem vakuumu
- Stalna destilacija topila
- Neprekinjeno filtriranje topila
- Sušenje različnih filtrov pred odpiranjem / praznjenjem
- Ločevanje vode
- Ločitev olja od topila z možnostjo samodejnega praznjenja odpadka
- PLC s podrobnim in stalnim prikazom vseh obratovalnih parametrov
- Ethernet oddaljena povezava

ILSA stroji predstavljajo rešitev za natančno čiščenje sestavnih delov iz vseh vrst kovin in številnih plastičnih mas, obdelanih z različnimi hladilnimi sredstvi, tudi istočasno znotraj iste naprave, z uporabo postopka, ki omogoča razmaščevanje, čiščenje in temeljito sušenje kosov, tudi ob prisotnosti kompleksnih oblik, slepih lukenj in kapilar.
ILSA je prisotna prek lastnih prodajnih in tehničnih predstavnikov po vsej Evropi, ZDA in Mehiki, Indiji, jugovzhodni Aziji.

The last solutions are in addition to the features of all ILSA systems that are distinguished by :
- *Operation in TOTAL VACUUM*
- *Continuous distillation of the solvent*
- *Continuous filtration of the solvent*
- *Drying of different filters before opening / emptying*
- *Water separation*
- *Separation of oil from the solvent, with the possibility of automatic discharge in continuous*
- *PLC with detailed and continuous indication of all operating parameters*
- *Ethernet remote connection*

The ILSA machines represent a solution for the precise cleaning of components of all types of metals and many plastics treated with different coolants, even simultaneously within the same plant, with the application of a process that allows to degrease, clean and dry thoroughly each type of particular also in the presence of complex geometries and blind holes and capillaries.
ILSA is present through its own sales and technical representatives throughout Europe, USA & Mexico, India, South East Asia, by providing to customer the opportunity to work with a global partner.

SERIJA IK E

Modificirani alkoholi ali alifatski ogljikovodiki – delovanje v popolnem vakuumu
Modified alcohols or Hydrocarbon - Fully VACUUM operation

FULL ELECTRIC POWERED

	Dimenzije polnenja *Loading dimensions* mm	Volumen polnenja *Loading volume* lt	Kapaciteta polnenja *Loading capacity* kg	Volumen komore *Chamber volume* lt	Dimenzije stroja *Machine dimensions* mm (ŠxGxV)
IK 5 E	150 x 210 x 130	5	10	20	1200 x 1350 x 2410
IK 10 E	220 x 370 (320) x 200	12	30	60	1400 x 1600 x 2410
IK 20 E	320 x 480 x 200	30	50	100	1400 x 1600 x 2410
IK 25 E	320 x 480 (520) x 200	30	75	130	2200 x 1800 x 2510
IK 40 E	320 x 980 x 200	60	100	220	2200 x 2100 x 2510
IK 50 E	480 x 660 x 400	120	150	390	3200 x 2400 x 2960
IK 50 E M	480 x 960 x200	95	150	390	3200 x 2400 x 2960
IK 100 E	480 x 980 x 400	180	200	510	3200 x 2400 x 2960
IK 100 E M	480 x 1280 x 200	130	200	510	3200 x 2400 x 2960
IK 200 E	660 x 960 x 400	250	400	800	4000 x 2400 x 3410
IK 400 E	850 x 1240 x 970	1000	600	3000	6000 x 2800 x 3410

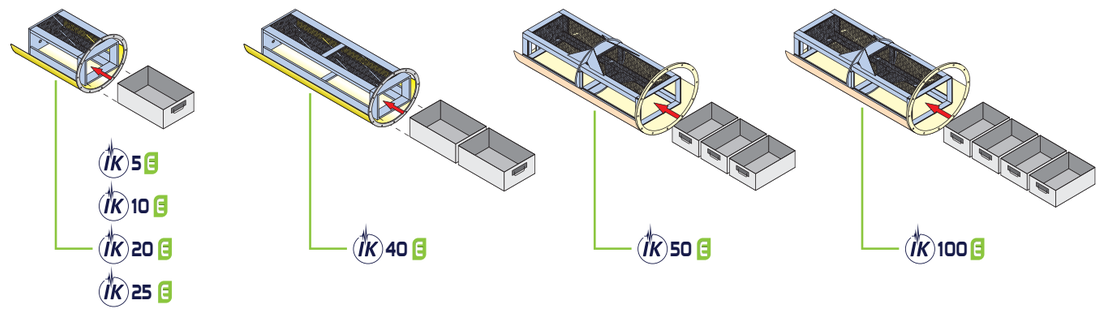

SERIJA IPK

Konvertibilni za uporabo z več topili – vakuumsko sušenje
Convertible multisolvent - VACUUM Drying

Na voljo od modela 25.
Available from model 25.

SERIJA ILS

Specialne aplikacije in stroji velikih dimenzij
Special and Big Sized Applications

KOMBINIRANO VAKUUMSKO SUŠENJE
COMBINED VACUUM DRYING

KAPACITETA IN DIMENZIJE GLEDE NA APLIKACIJO
CAPACITY AND DIMENSIONS ACCORDING TO THE APPLICATION

IK EVO E

FULL ELECTRIC POWERED

in še bolj...
even more...

... produktivni!
... performing!

1. Dva velika rezervoarja v manjšem prostoru
   Two big tanks in less space
2. Popolna dostopnost obdelovalne komore
   Total accessibility to treatment chamber
3. Višji vakuum z dvojno črpalko
   Higher vacuum with double pump
4. Visoko učinkovita črpalka za topila
   High performance solvent pump
5. Samodejna destilacija olja
   Automatic oil recovery
6. Električni grelci
   Heat resistances
7. Najboljša dostopnost za vzdrževanje
   Best accessibility for maintenance
8. Priključek za vodo ni potreben
   No water connection needed
9. Desetkratna kondenzacijska površina
   Tenfold condensation surface
10. Optimizirano ločevanje vode
    Optimized water separation

	Dimenzije polnenja *Loading dimensions*	Volumen polnenja *Loading volume*	Produktivnost *Productivity*	Kapaciteta polnenja *Loading capacity*	Volumen komore *Chamber volume*	Dimenzije stroja *Machine dimensions*
	mm	*lt*	*ciklov/uro - cycles/h*	*kg*	*lt*	*mm (ŠxGxV) - mm (LxPxH)*
IK 25 EVO E	**320 x 480 (520) x 200**	**30**	**8-10**	**75**	**130**	**2200 x 2100 x 2510**
IK 40 EVO E	**320 x 980 x 200**	**60**	**8-10**	**100**	**220**	**2800 x 2000 x 2510**
IK 50 EVO E	**480 x 660 x 400**	**120**	**8-10**	**150**	**390**	**4000 x 2400 x 2960**
IK 100 EVO E	**480 x 980 x 400**	**180**	**8-10**	**200**	**510**	**4000 x 2400 x 2960**

čiščenje kovin

Čiščenje kovin je postopek, katerega namen je odstraniti industrijsko ustvarjeno organsko (olja, maščobe, voski, itd.) in neorgansko (ostružki, prah, itd.) onesnaženje, s površin materialov, ki nastane zaradi obdelave kovin.
Čiščenje je osnovna faza v proizvodnem procesu, ki ima posledice, ne samo na nadaljna dela in sestavo, ampak tudi na funkcionalnost in kvaliteto končnega izdelka.
KAJ LAHKO ČIŠTIMO? VSE! Možnosti uporabe so neskončne. Diagram kaže nekaj najbolj pogostih strojev, ki se pojavljajo v proizvodnji kosov, ki se lahko čistijo z našimi stroji.

LIVARSKI STROJ
TRANSFER

STRUŽNICA
LATHE

PREŠA
PRESS

OBDELOVALNI CENTER
MACHINING CENTER

PEČ
FOURS

POLIRNA NAPRAVA
POLISHING MACHINES

the metal cleaning

Metal cleaning is the process necessary to remove organic contaminants (oil, grease, etc.) and inorganic contaminants (chips, dust, etc.) built up on the surface of industrial manufactured articles due to their production and/or machining.
Cleaning is a fundamental stage of the production process that not only affects the following machining and/or assembly, but also final product quality and operation.
WHAT CAN IT CLEAN? ANYTHING! Applications are countless: the diagram shows some of the most common machines producing the parts that can be cleaned using our metal cleaning machines.

topila uporabljena začišenje

ILSA proizvaja specifične sisteme, ki za delovanje uporabljajo različne tipe proizvodov, kar omogoča kupcu široko izbiro in večjo verjetnost, da se za čiščenje določenih kosov oz. nečistoč, najde optimalno rešitev.

MODIFICIRANI ALKOHOLI
MODIFIED ALCOHOLS

ALIFATSKI OGLJIKOVODIKI
ALIPHATIC HYDROCARBON

HALOGENIRANA
HALOGENATED

DRUGA TOPILA
OTHER SOLVENTS

the fluid used to clean parts

ILSA manufactures specific systems working with different cleaning product types, so that customers have a wide range to choose from and a higher possibility to find the solution most suitable to parts to be treated and type of dirt to be removed.

		Modificirani alkoholi *Modified alcohols*	Isoparafini Od C9 Do C12 (Alifatski Ogljikovodiki) *Isoparaffin - C9 to C12 (Aliphatic Hydrocarbons)*	Tetrakloroetilen-perkloroetilen (Halogenirani - Klorirani) *Tetrachloroethylene-perchloroethylene (Halogenated - Chlorinated)*
Specifična teža (gostota) *specific weight (density)*	*kg/l*	**0,88**	**0,75 - 0,77**	**1,62**
Specifična toplota *Specific heat*	*kJ/kg K*	**2,0**	**ca. 2,0**	**0,9**
Toplota pri izparevanju *Heat of vaporization*	*kJ/kg*	**280**	**255 - 300**	**210**
Vrelišče *Boiling temperature*	*°C*	**170 - 175**	**180 - 200**	**121**
Parni tlak pri 20 °c *Vapor pressure at 20 °c*	*mbar*	**1,1**	**0,3 - 1,5**	**18,9**
Plamenišče *Flash point*	*°C*	**63**	**56 - 80**	**-**
Površinska napetost *Surface tension*	*mN/m*	**26,1**	**23 - 25**	**32**
Indeks butanol *Kauri-butanol value*		**>1000**	**ca. 30**	**ca. 90**

način pranja

Sistem lahko izkorišča različne kombinacije različnih faz, da uspešno raztopi organske in mehansko odstrani neorganske nečistoče. Te faze so lahko: škropljenje, potapljanje, ultrazvok, škropljenje pod visokim pritiskom ter

razmaščevanje s hlapi.

Po čiščenju se kosi, glede na potrebe, lahko zaščitijo proti koroziji.

the way the parts are cleaned

The systems may exploit a combination of different stages to solubilize organic dirt and mechanically remove any inorganic dirt. Such stages might be spraying, immersion, ultrasonic, high-pressure injection and vapour degreasing.

After cleaning, parts can be protected against corrosion, if necessary.

ŠKROPLJENJE 1
SPRAYING

2 **POTAPLJANJE**
IMMERSION

ULTRAZVOK 3
ULTRASONICS

4 **ŠOBE POD PRITISKOM**
HIGH-PRESSURE INJECTION

RAZMAŠČEVANJE S HLAPI 5
VAPOUR DEGREASING

6 **SUŠENJE**
DRYING

PROTIKOROZIJSKA ZAŠČITA opt.
PROTECTIVE COATING

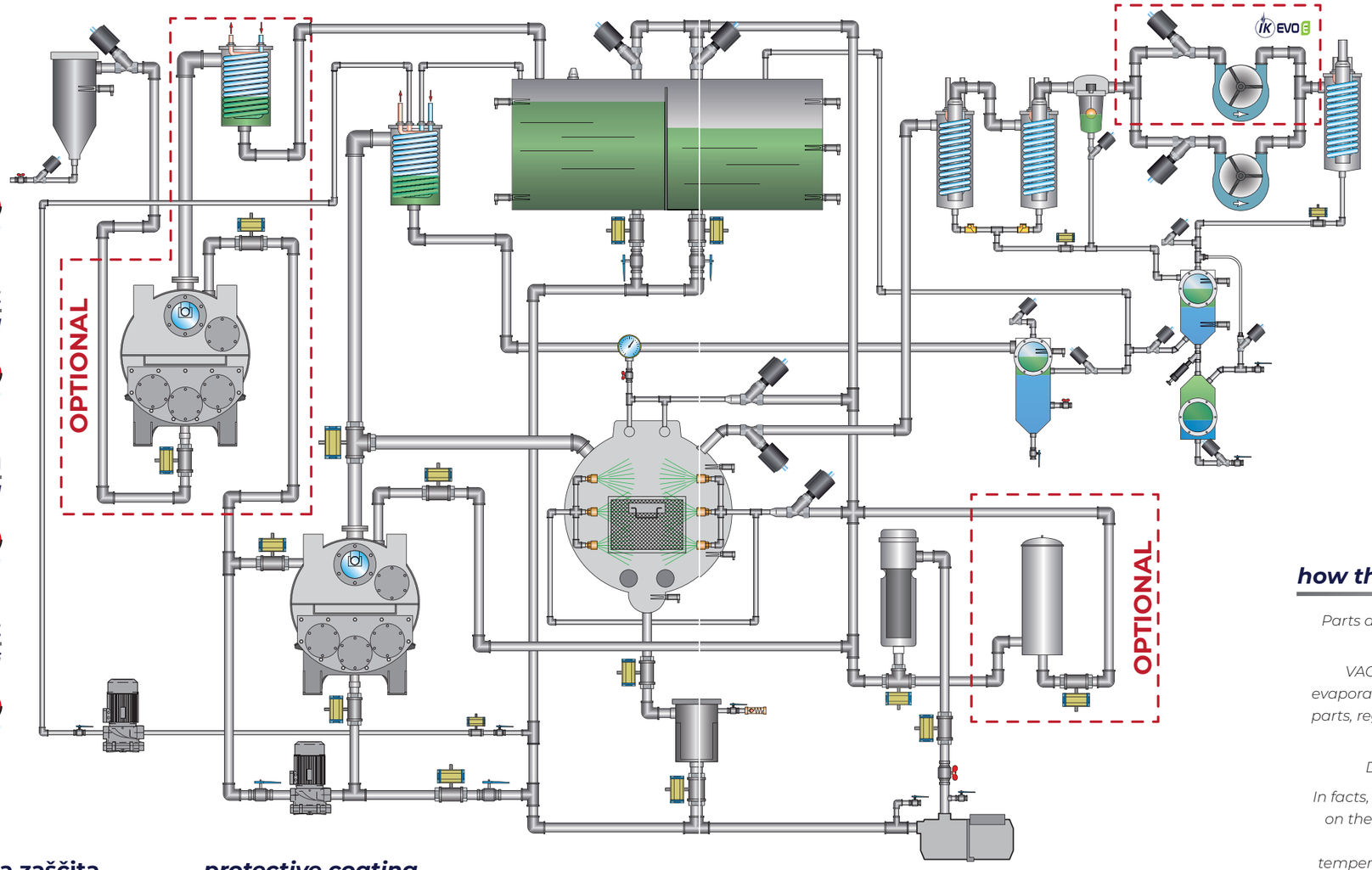

protikorozijska zaščita

Posebne opcijske konfiguracije omogočajo zaščito izdelkov ob koncu cikla.

Fazo lahko izvedemo z razpršitvijo konzervirnega produkta ali s fazo potopitve v zaščitni mešanici.

protective coating

Specific optional configurations allow to apply protective products on pieces at the end of the cycle.

The phase can be carried out by direct nebulization of the product or by a total immersion phase in a solvent and protective mixture.

kako se kosi posušijo

Kosi se posušijo s tehnologija vakuuma, ki je bila vedno karakteristika sistema ILSA.

Vakuumsko sušenje omogoča skoraj takojšnje izhlapevanje topila s površine obdelovanih kosov, ne glede na njihovo obliko, ki je lahko bolj ali manj zapletena.

Faza sušenja je kratka in učinkovita zaradi načela, po katerem s padcem tlaka tekočina izhlapi pri nižji temperaturi, kot je potrebna pri atmosferskem tlaku.

S poviševanjem temperature kosov med fazo čiščenja in sesanjem zraka iz obdelovalne komore, dokler se ne doseže potrebne stopnje vakuuma (<40 mbar s kloriranimi topili in <5 mbar z modificiranimi alkoholi), povzročimo izhlapevanje topila s kosov. Topilo se kondenzira v kondenzatorju in se vrne v rezervoar skozi separator.

how the parts are dried

Parts are dried in VACUUM, a technology that has always characterized ILSA systems.

VACUUM drying, in facts, allows almost instant evaporation of the solvent on the surface of treated parts, regardless of their shape that might be more or less complex.

Drying stage is therefore short and efficient.

In facts, this process, into a vacuum plant, happens on the base of the principle for which by reducing the pressure a liquid evaporates at lower temperature than what necessary at atmospheric pressure.

By acting on the temperature of the load during the cleaning phase and sucking the air from the treatment chamber until reaching the necessary vacuum degree (< 40 mbar with chlorinated solvents and <5 mbar with modified alcohols), it is got the solvent evaporation from the load. The solvent is condensed by the cooler and comes back to the tank through the separator.

rokovanje z obdelovanci

Na splošno se kosi, katere je potrebno čistiti, v stroj vnašajo v ustreznih okvirih ali košarah, ki so glede na potrebe in zahteve kosov, različnih oblik in dimenzij.

Glede na zahteve proizvoda in lastnosti košar ali okvirov, so kosi lahko vstavljeni raztreseno, v določenem položaju ali pa so celo fiksirani, kar omogoča njihovo premikanje v komori.

Uporabijo se lahko oblikovani pokrovi, ki kose držijo v položaju, jih fiksirajo ali omejujejo njihovo gibanje.

V OKVIRJU - *FRAMES*

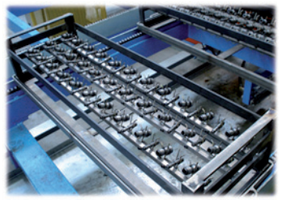

POSEBNE KOŠARE - *SPECIAL BASKETS*

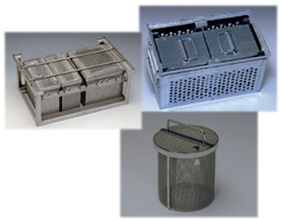

VELIKE KOŠARE - *BIG BASKETS*

STANDARDNE KOŠARE - *STANDARD BASKETS*

POZICIONIRANI - *POSITIONED*

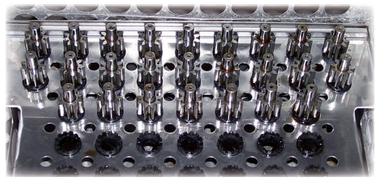

RAZTRESENI - *IN BULK*

FIKSIRANI - *FIXED*

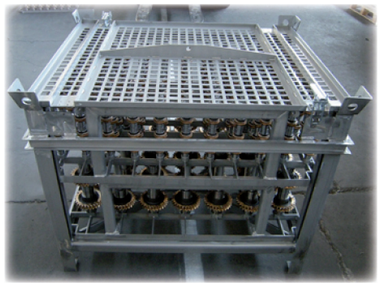

how handling the parts to be cleaned

The parts to be cleaned are usually inserted into the cleaning systems by means of suitable baskets/frames of different dimensions and shapes. According to product features and baskets/frames characteristics, the parts could be inserted in bulk or in a certain position or even fixed in place, yet allowing load movement.
Shaped covers could be used to hold parts in loading position, fasten them or restrain their movements.

vstavljanje košar v stroj

Košare, ki vsebujejo kose se lahko kombinirajo na različne načine, ter tako čim bolje izkoristijo celotno prostornino obdelovalne komore.
Ko so vstavljene v stroj se lahko fiksirajo avtomatsko ali ročno.
Vstavljajo se lahko ročno, s pomočjo transportnih platform ali s pomočjo avtomatiziranih robotskih sistemov, po možnosti v kombinaciji z odjemnim ter odlagalnim prostorom.

ENA KOŠARA
SINGLE BASKET

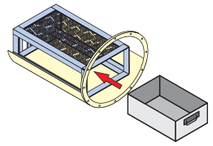

VEČ KOŠAR HORIZONTALNO
MULTIPLE BASKETS IN HORIZONTAL

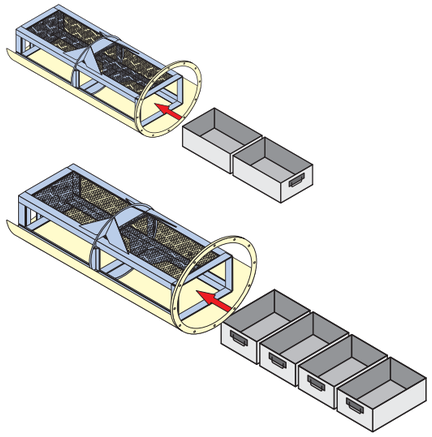

ROČNO VSTAVLJANJE
MANUAL LOADING

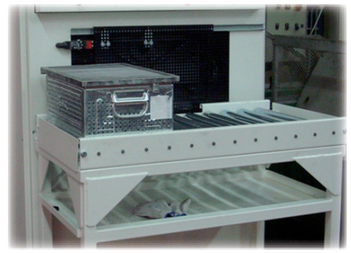

AVTOMATSKO NAKLADANJE
AUTOMATIC LOADING

setting up the load

The baskets contain the parts that make up THE LOAD and can be combined in different ways to optimise exploitation of the overall volume of the chamber.

The load is inserted, secured in place inside the machine in an automatic or manual way.

Load can be inserted and removed by hand, by means of roller conveyors and platforms, or by matching automatic or robot-controlled systems to the machine, possibly together with storage areas at infeed for the dirty parts and at outfeed for the clean parts.

obvladovanje kosov v komori

V skladu z zahtevami in značilnostmi kosov se lahko le-ti obračajo oz. vrtijo z nastavljeno hitrostjo ali nagibajo do določenega kota ali ostanejo statični

Vse nastavitve lahko programira uporabnik.

Ta rešitev omogoča enotno premikanje in izpostavljenost obdelovancev posameznim fazam

cikla, tudi pri konfiguracijah z več košarami.

Če košare nimajo lastnih pokrovov, je mogoče oblikovati avtomatske ali polavtomatske pokrove, ki preprečijo izpadanje kosov med pranjem.

ROTACIJA PO OSI
ROTATION ON ITS AXIS

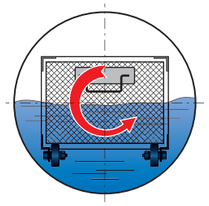

KONTROLIRANO NAGIBANJE
CONTROLLED SWINGING

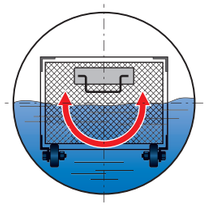

POKRIVANJE V STROJU
COVERING IN MACHINE

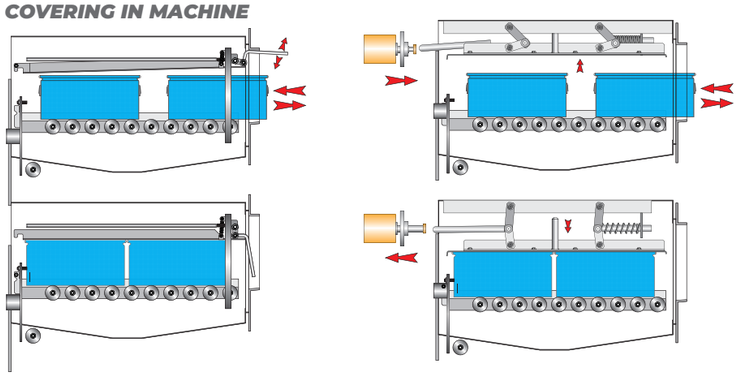

REŠITVE Z VEČ KOŠARAMI
MULTI-BASKET SOLUCTIONS

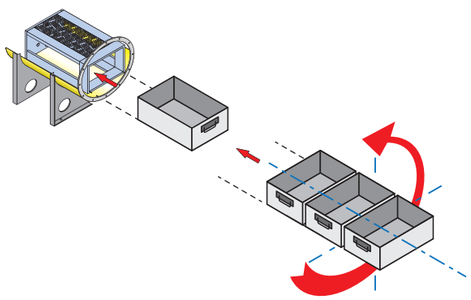

handling the load in the machine

According to parts requirements and features, the load can be completely turned around or swung at a set speed and by a set angle.

These two settings can be programmed by user and also allow for leaving load static.

This solution allows to make uniform mouvements and exposure of the load to the phases of the cycle, even with multi-basket configurations.

If baskets did not have their own covers, it is possible to design automatic or semi automatic covers to prevent parts from falling out during rotation.

upravljanje s sistemom

Cikel je programiran in krmiljen s pomočjo PLC Siemens in programske opreme, ki je posebej zasnovana za uporabo v ILSA čistilnih sistemih.

Možno je nadziranje vseh funkcionalnih in informacijskih funkcij sistema (Dnevnik, Alarmi, Nastavitve, Cikli vzdrževanja).

Te dejavnosti se lahko izvedejo tudi preko ethernet-a, ki se uporablja tudi za spletno pomoč.

Poleg tega lahko ILSA dobavi vse naprave in dopolnilne storitve za »paket na ključ« s pogoni in krmilnimi napravami za čistilne sisteme.

PLC PROGRAMIRANJE
PLC CONTROL

POMOČ NA DALJAVO
REMOTE ASSISTANCE

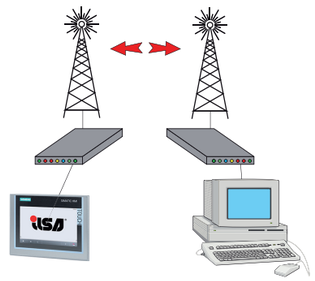

UPRAVLJAJE PRODUKCIJE IN SLEDLJIVOSTI
PRODUCTION AND TRACEABILITY MANAGEMENT

INDUSTRY 4.0
READY

VZDRŽEVALNI PROGRAMI
MAINTENANCE PROGRAMMES

controlling the system

Cycle is programmed and controlled by means of a PLC Siemens and a software specifically designed for use on ILSA cleaning systems.

Is possible to control all system functional and information features (Log, Alarms, Set Up, Maintenance Programmes).

These activities can also be performed through the ethernet that is also used to obtain on-line assistance.

Moreover, ILSA can supply all devices and complimentary services to offer a "turnkey package" with drives and controls for the cleaning systems.

zagotavljanje čistilnih rezultatov na daljši čas

Topilo odstrani in prevzame s kosov vso nečistočo.

Stroji ILSA uporabljajo specifične naprave in programe, ki omogočajo vzdrževanje topila na optimalnem nivoju.

Med fazami se uporabljajo ustrezni filtri (različnih zmogljivosti in tipov), ki zadržijo vse delce (kot so ostružki ali prah) medtem ko se olja in maščobe ločijo od topila z vgrajenim destilacijskim sistemom.

SUŠENJE FILTROV
FILTERS DRYING

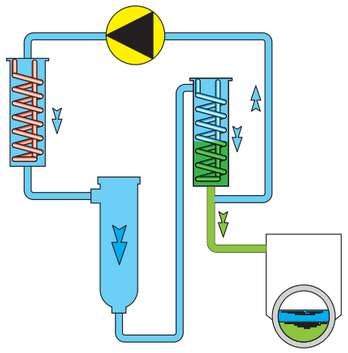

FILTRACIJA
FILTERING

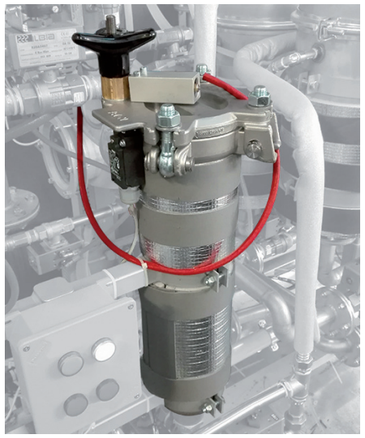

KATROŠNI FILTRI
CARTRIDGE FILTERS

KONTINUIRANA DESTILACIJA
CONTINUOUS DISTILLATION

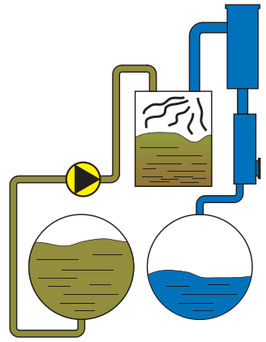

LOČEVANJE VODE
WATER SEPARATION

the way the machine ensure such results during the time

The cleaning fluid removes and takes up all impurity from the parts.
ILSA machines feature specific devices and programmes that allow the fluid to keep ideal conditions.
During these stages, suitable filters are used, having different capacity and type, to hold any dirt particle such as chips and dust, while oil and grease are separated from fluid thanks to built-in and continuous distillation system.

varovanje okolja

Raziskovalna in razvojna dejavnost podjetja ILSA se je vedno osredotočala na izboljšanje in optimizacijo varnostnih pogojev in varovanja okolja ter implementacijo predpisov o uporabi čistilnih sistemov.

Primer je sistem "ILSA OE", ki z ustrezno hidravlično konstrukcijo in programsko opremo za avtomatsko upravljanje omogoča izkoriščanje hlapov topil, ki nastanejo v destilatorju za segrevanje topila iz rezervoarja. S tem se zmanjša tudi poraba hladilne energije, ki je potrebna za kondenzacijo hlapov.

Konfiguracija "Plug & Play" vključuje kondenzacijski sistem z zračnim izmenjevalnikom, ki odpravlja potrebo po priključitvi na zunanjo hladilno vodo ali dodatno opremo, kot so hladilniki.

ILSA OE SISTEM
ILSA OE SYSTEM

ILSA - OE System

LOVILEC TOPILA
SOLVENT SAFETY TRAY

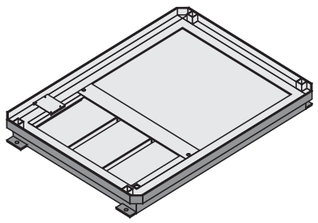

AVTOMATSKO POLNENJE/PRAZNENJE TOPILA IN UMAZANIJE
AUTOMATIC LOADING/UNLOADING OF SOLVENT AND RESIDUES

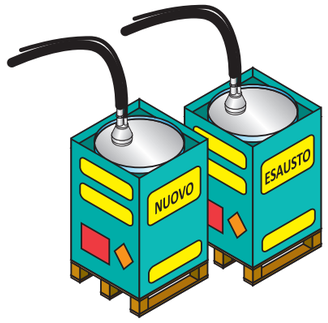

PLUG & PLAY
PLUG & PLAY

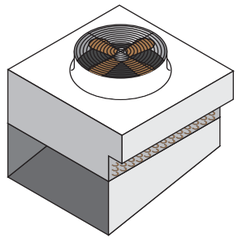

AVTOMATSKA REŠITEV ZA ODSTRANJEVANJE ODPADKA
AUTO MANAGING - MACHINES DISCHARGE

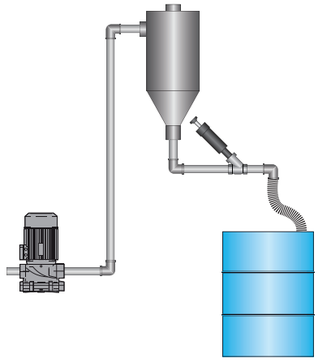

environment friendly

ILSA R&D has always focused on enhancing and optimising the safety conditions and the environment protection, and implemented the regulations about the use of the cleaning systems.

An example of attention to energy consumption, then to the environment, is the system "ILSA OE" which, through a suitable hydraulic construction and an automatic management software, allows to manage and exploit the solvent vapors generated in the distiller for both degreasing of the components to be cleaned that for the heating system, reducing both power consumption that the refrigeration energy used for the condensation of the vapors.

The configuration "Plug & Play" incorporates a condensing system with air exchanger that eliminates any type of connection to external cooling water or additional equipment such as chillers.